

Product model: HTM208L Low Power consumption Temperature Transmitter

Manufacturer: Nanjing Hangjia Electronic Technology Co., LTD.

Product Category: temperature transmitter

Application: IoT, industrial process control

Overview

HTM208L low-power temperature sensor uses high-quality and high-stability PT100 or PT1000 as the sensing element and converts the temperature signal into a standard RS485 signal output through a signal conditioning circuit to achieve the measurement of fluid temperature. This product is powered by a built-in lithium battery with extremely low power consumption and long service life. In addition, this product comes with on-site display, and can also be networked through RS485 or connected to a wireless module for wireless transmission.

The product has been screened for long-term aging and stability, and its performance is reliable and stable. It can be used in open spaces with relatively harsh environments. It is widely used in temperature measurement and various industrial process control in the IoT industry.

Feature

- Powered by external lithium battery
- Low power consumption
- With site display
- Support RS485 communication, adaptable wireless module
- High protection level

Technical Parameters

Temperature Range	50…0～100…500℃
Measuring Medium	Various fluid compatible with contact materials
Output Signal	RS485
Power Supply	Vs=3.1~8 V_{DC} (Built-in lithium battery ER14250, 3.6V 1200mAh) Vs=5V_{DC} (external power supply supported) Vs=24V_{DC} (external power supply supported)
Power consumption (RS485 output)	Standby current: <20uA Date collection cycle: 0~65535s Power Consumption: About 200uA with data collection cycle as 1s About 70uA with data collection cycle as 3s About 50uA with data collection cycle as 5s. Note: Longer data collection cycle, lower consumption.
Accuracy	±0.5℃ （-50℃≤range≤100℃） ±1.0℃ （-50℃≤range≤300℃） ±3.0℃ （-50℃≤range≤500℃）
Ambient Temperature	-30～70℃
Storage Temperature	-30～70℃
Protection grade	IP65
Reverse polarity protection	No damage. Product will not work.
EMC	Compliance EN 61326
Insulation resistance	>100MΩ @500VDC
Insulation strength	Apply 500VAC 50Hz test voltage, no breakdown or arcing for 1 minute.

Structure Drawings (Unit: mm)

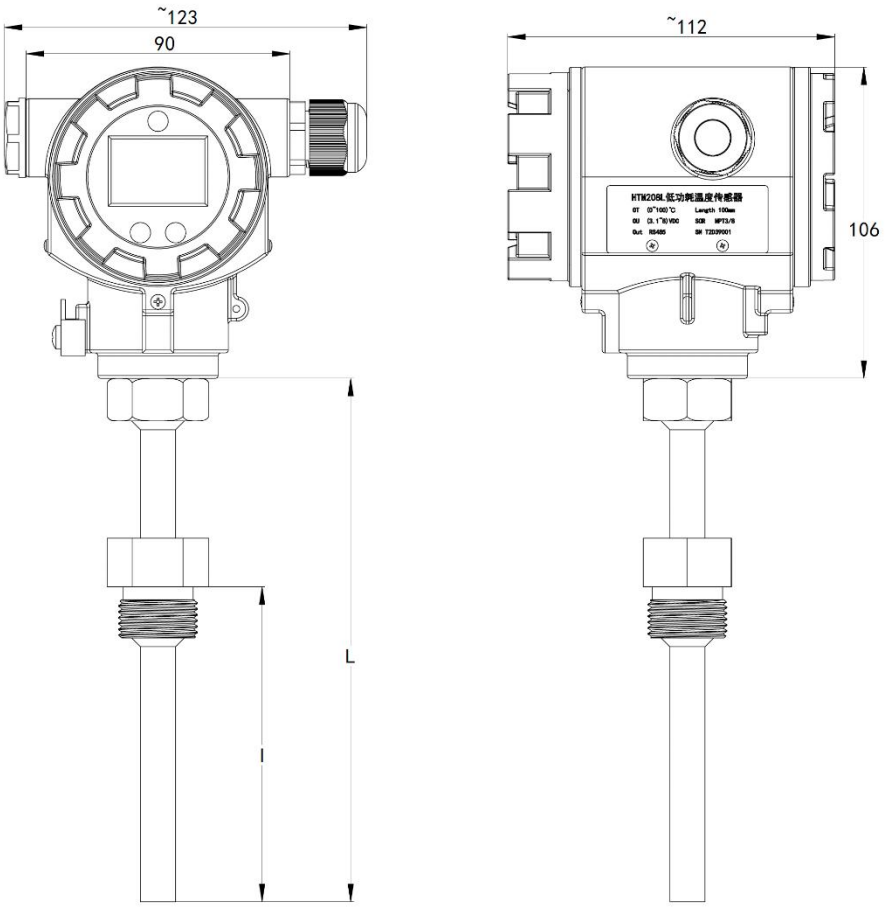

Material

Ordering code	Part	Description
S4	temperature probe	SS 304
S6		SS 316
Y1	Housing of protection shell	Cast aluminum alloy

Electrical Connection

Output signal	4-wire Modbus-RTU/RS485			
Definition	Power supply+(+V)	Power supply-(-V)	RS485A	RS485B
Battery compartment/terminal	Battery+	Battery+	485A	485B

Ordering Guide

Model No.	Type								
HTM208L	Low power consumption Temperature Transmitter								
	Code	Output Signal							
	R	RS485							
		Pressure Range	Measuring Range						
		(T1 ~ T2)℃	T1 is lower limit T2 is upper limit						
			Code	Temperature measuring element					
			PT100	PT100					
			PT1000	PT1000					
				Code	Process connection				
				P1	M20×1.5				
				P4	G1/2				
				P17	M27×2				
				K1	1.5" clamp				
				K2	2" clamp				
				F20	DN20				
				F50	DN50				
					Code	Electronic connection			
					C9	cable gland			
						Code	Probe Material		
						S4	304		
						S6	316L		
							Code	Probe length	
							L/l	L=Total length(mm) l=insertion depth(mm)	
								Code	Others
									Others requests
eg.: HTM208L	R	(0 ~ 200)℃	PT100	P1	C9	S4	L=150mm l=50mm		

Certification Information

Factory certification	
Certification organization	CQM
Quality management system	ISO 9001:2015
Certification scope	Research, development and manufacture of pressure transmitter and temperature transmitter
Certificate No.	00223Q21711R1S