HPM1300L Low-Power Pressure Transmitter



Nanjing Hangjia Electronic Technology Co., Ltd.

Overview

The HPM1300L low power pressure sensor used Ultra-small structure design, while utilizing high-performance silicon piezoresistive sensor and special electronic conditioning circuit, through a strict process flow assemble and produced. This product has a full stainless steel appearance, a variety of electrical outlet and a variety of output signals, wide temperature area compensation, the overall accuracy of high characteristics. In addition, this product uses laser welding process connection, as well as internal potting treatment, moisture-proof and earthquake-proof, overall higher protection level. In addition, the pressure sensor inside the product is used isolated diaphragm type structure, which can compatible with the gas, liquid and steaming pressure measurement and control of various media.

The product can be directly powered by external lithium batteries, with low power consumption.It can be easily connected to various devices or wireless modules, easy assembly,strong application, can be widely used in the Internet of Things industry pressure detection.

Features

- Pressure measurement for IoT application
- Can be powered by external lithium battery
- Low power consumption
- Supports I2C, RS485 or voltage signal output
- Small size, easy to install
- All stainless steel construction
- High protection level
- Support customer customization

Technical Parameters

Measuring medium: Various liquids and gases compatible with contact materials

Pressure Range: -100kpa... 0 ~ 10kPa... 100MPa(Gauge pressure);

0 ~ 20kPa... 10MPa(Absolute pressure).

Overload: 1.5 times pressure range of full scale

Accuracy: ±0.5%FS(typical) ; ±0.25%FS (advance) Reference 25ºC

Long-term stability: ±0.25%FS/year

Ambient temperature: -40～85℃

Medium temperature:-40~125℃

Storage temperature:-40～85℃

Compensation temperature: -10～70℃ （other pressure range）; 0～60℃ （10kPa）

Temperature Coefficient of Zero (in Compensation temperature range):

±1.5%FS (other pressure range);±2.0%FS(10kPa)

Temperature Coefficient of Full Scale(in Compensation temperature range): ±1.5%FS (other pressure range);±2.0%FS(10kPa)

Output signal: I2C (Vs=3.0~5.5 VDC in full scale)

RS485 (Vs=3.0~5.5 VDC （Pressure≤5MPa*）)

0.25~1.25、0.5~2.5V (Vs=3.1~8.0 VDC Pressure≤5MPa*）)

Power Consumption (I2C): Normal mode <3mA

Hibernate mode <100nA

Wake-up time: 4ms

Power Consumption (RS485): 0.2-0.3mA based on 1s communication once

Acquisition Time: about 80ms

Power Consumption (Voltage): <2.5mA

Protection grade: IP67- side direct cable outlet, top direct cable outlet; [Sealed gauge and absolute pressure types only]

IP65-Hirschmann DIN43650;

IP66-M12 x 1;

Insulation resistance:>20MΩ @500VDC

Insulation strength:<2mA @ 500VAC 1min

Material

Shell Material：304, 316L

Cable: Polyurethane shielded cable

Structural drawings（unit:mm）

Side direct cable outlet

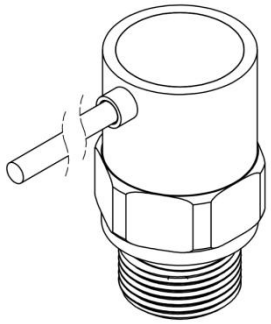

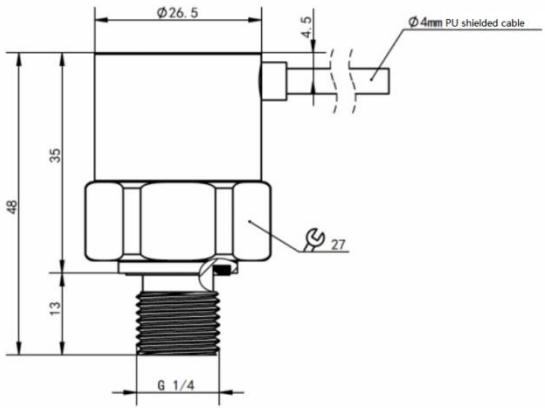

Top direct cable outlet

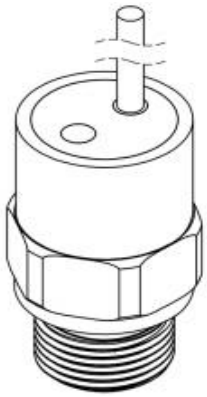

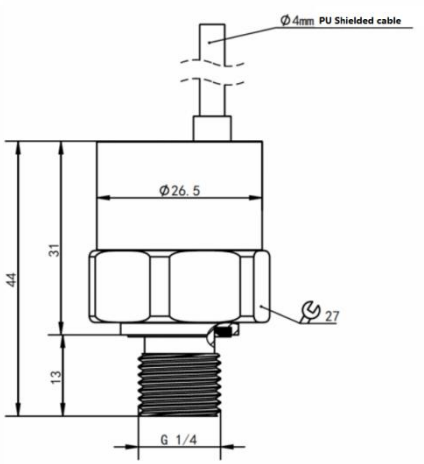

Hirschmann DIN43650

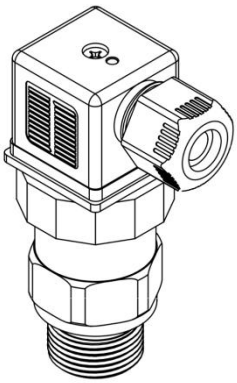

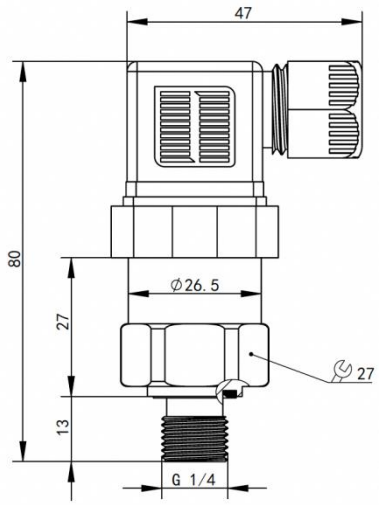

M12 x 1

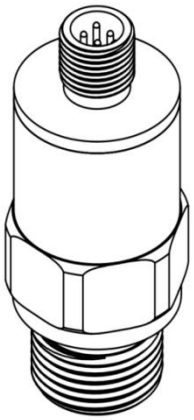

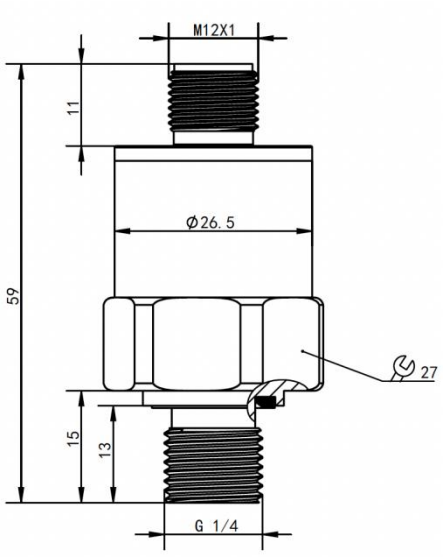

Electrical Connection

Side cable outlet (ordering code C2C) Top cable outlet (ordering code C2D)	Hirschmann DIN43650 (ordering code C1)
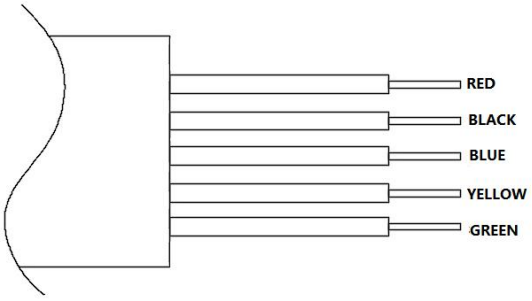	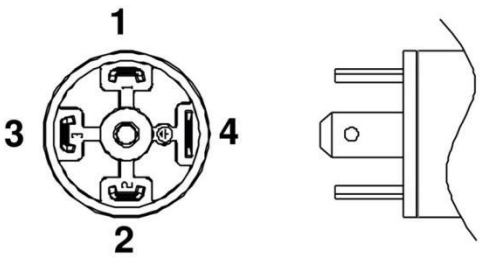

M12×1 (ordering code C5)	M12×1, with cable (ordering code C5X)
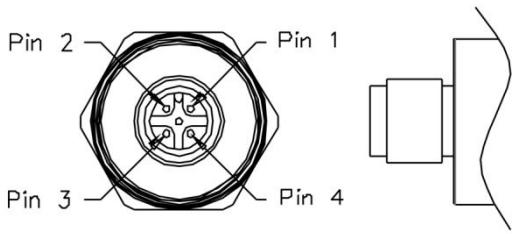	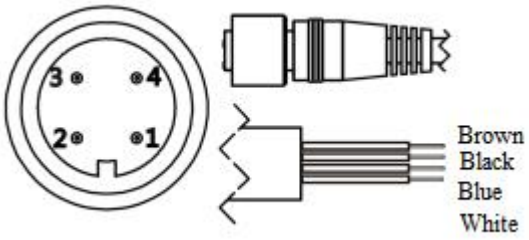
M12×1*5P (ordering code C6)	**M12×1-5P, with cable (ordering code C6X)**
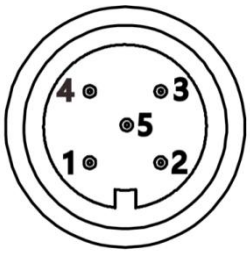	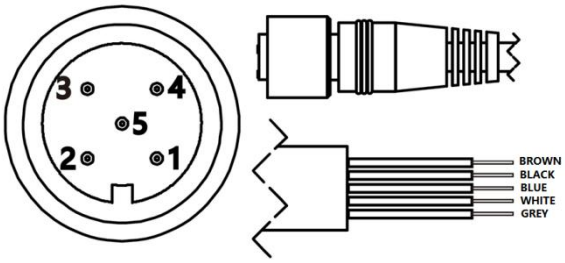

Three wires 0.25-1.25, 0.5-2.5V Voltage output			
Signal definition	Power+ （+V）	Power - (GND）	Signal+(+OUT)
Hirschmann	1	2	3
Cable outlet	Red	Black	Blue
M12×1-4P	1	2	3
M12×1-4P,with cable	Brown	Black	Blue

Four wires Modbus-RTU/RS485				
Signal definition	Power+ （+V）	Power - (-V）	RS485A	RS485B
Hirschmann	1	2	3	4
Cable outlet	Red	Black	Yellow	Green
M12×1-4P	1	2	3	4
M12×1-4P,with cable	Brown	Black	Blue	White

I2C(No PD Hibernate control pin*) *Hibernate Control Pin, built-in 68k pull-up resistor, high level hibernate, low level wake up				
Signal definition	Power+ （+V）	Power - (-V）	SCL	SDA
Hirschmann	1	2	3	4
Cable outlet	Red	Black	Yellow	Green
M12×1-4P	1	2	3	4
M12×1-4P,with cable	Brown	Black	Blue	White

I2C(With PD sleep control pin*) *Hibernate Control Pin, built-in 68k pull-up resistor, high level hibernate, low level wake up					
Signal definition	Power+（+V）	Power - (-V）	SCL	SDA	PD(Sleep)
Cable outlet	Red	Black	Yellow	Green	Blue
M12×1-5P	1	2	3	4	5
M12×1-5P,with cable	Brown	Black	Blue	White	Grey

Ordering Guide

Model No.	Type						
HPM1300L	Low-power pressure transmitter						
	Code	Output Signal					
	C	I2C					
	R	RS485					
	V	Voltage					
		Pressure Range	Measuring Range				
		(0 ~ X)Mpa	Fill out X directly				
			Code	Connection Thread			
			P3	G1/4 male			
			P8	NPT 1/4 male			
			M8	M8X1 male			
				Code	Electronic output		
				C1	Hirschmann		
				C2C	Side cable outlet		
				C2D	Top cable outlet		
				C5	M12X1-4P		
				C5X	M12X1-4P with cable		
				C6	M12X1-5P		
				C6X	M12X1-5P with cable		
					Code	Housing Material	
					S4	SS304	
					S6	SS316L	
						Code	Additional Functions
						G	Gauge(Default)
						A	Absolute gauge
						QF	Inspection report
							Other requirement
e.g. : HPM1300L	C	0-16Mpa	P3	C2C	S4	G	